2nd Workshop “Restoration of Architectural Surfaces”

Timisoara 8 – 26 September 2003

Structural Restoration of Historical Monuments

Specific Examples from Greek Practice

by

Anastasiadis S. Anthimos

Dr. Structural Engineer

A unique structural heritage formed in approx. 2500 years

of life.

This architectural and structural originality should be conserved

An early restoration action was marked when *Alexander the Great* had gave an order to someone called Aristovoulos to rehabilitate some deteriorated parts from the grave of *Kyrous* at Pasargades

The Athens Charter (1931) is the first attempt regarding the architectural and structural aspects of monumental restoration

Table 1. The main resolutions of Athens Charter.

1. International organizations for Restoration on operational and advisory levels are to be established.
2. Proposed Restoration projects are to be subjected to knowledgeable criticism to prevent mistakes that will cause loss of character and historical values to the structures.
3. Problems of preservation of historic sites are to be solved by legislation at national level for all countries.
4. Excavated sites, which are not subject to immediate restoration, should be reburied for protection.
5. Modern techniques and materials may be used in restoration work.
6. Historical sites are to be given strict custodial protection.
7. Attention should be given to the protection of areas surrounding historic sites.

The Venice Charter (1964) is the first

comprehensive step

regarding the

architectural and structural aspects

of

monumental restoration

Table 2. Fundamental restoration principles according to Venice Charter.

ARTICLE 6. The conservation of a monument implies preserving a setting which is not out of scale. Wherever the traditional setting exists, it must be kept. No new construction, demolition or modification, which would alter the relations of mass and color, must be allowed.
ARTICLE 9. The process of restoration is a highly specialized operation. Its aim is to preserve and reveal the aesthetic and historic value of the monument and is based on respect for original material and authentic documents. It must stop at the point where conjecture begins, and in this case moreover any extra work which is indispensable must be distinct from the architectural composition and must bear a contemporary stamp. The restoration in any case must be preceded and followed by an archaeological and historical study of the monument.
ARTICLE 10. Where traditional techniques prove inadequate, the consolidation of a monument can be achieved by the use of any modem technique for conservation and construction, the efficacy of which has been shown by scientific data and proved by experience.
ARTICLE 11. The valid contributions of all periods to the building of a monument must be respected, since unity of style is not the aim of a restoration. When a building includes the superimposed work of different periods, the revealing of the underlying state can only be justified in exceptional circumstances and when what is removed is of little interest and the material which is brought to light is of great historical, archaeological or aesthetic value, and its state of preservation good enough to justify the action. Evaluation of the importance of the elements involved and the decision as to what may be destroyed cannot rest solely on the individual in charge of the work.
ARTICLE 12. Replacements of missing parts must integrate harmoniously with the whole, but at the same time must be distinguishable from the original so that restoration does not falsify the artistic or historic evidence.

The Krakow Charter (2000) is the first

step taking into account a global view of environmental heritage as well as the European Unification

Japan:

´´Destroy the former temple and rebuilt it a new like it was before with the same ways of construction and doing that every twenty or thirty years. For Japanese the most important think is to preserve and to transmit up the knowledge of building

In some cases the articles of Venice Charter it is not possible to be respected (11, 12, 13, 15). Case of Warsaw, Poland

The European way of thinking on Monumental Restoration

1. The Athens Charter (1931) is the first attempt regarding the architectural and structural aspects of monumental restoration

2. The Venice Charter (1964) is the first

comprehensive step regarding the architectural and structural aspects of monumental restoration

3. The Krakow Charter (2000) is the first

step taking into account a global view of environmental heritage as well as the European Unification

DEFINITIONS IN STRUCTURAL RESTORATION

- Monument
  i. Historical Value
  ii. Artistic Value
  iii. Distinct value

- Conservation

A multidisciplinary approach of safeguarding the country's historico-cultural heritage

- Preservation
  i. Cleaning
  ii. Maintaining

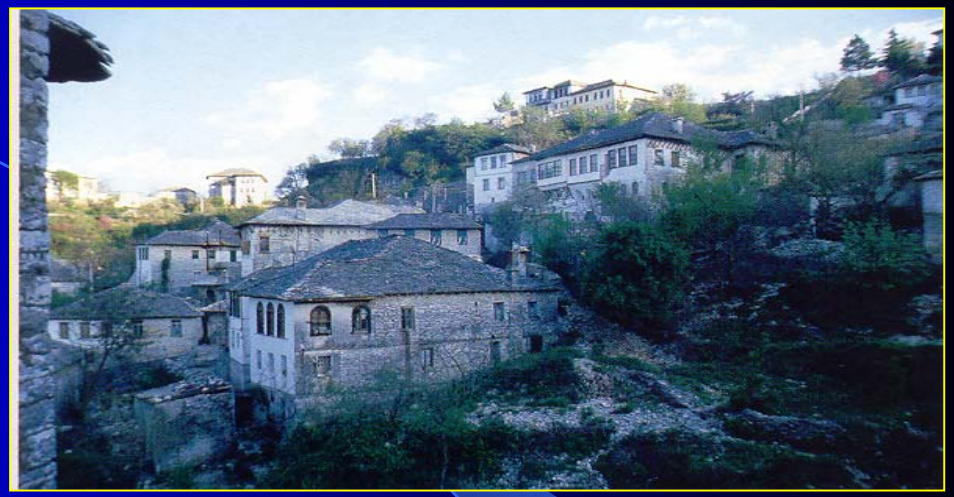

- Restoration
  i. Maintaining
  ii. Repair
  iii. Strengthening

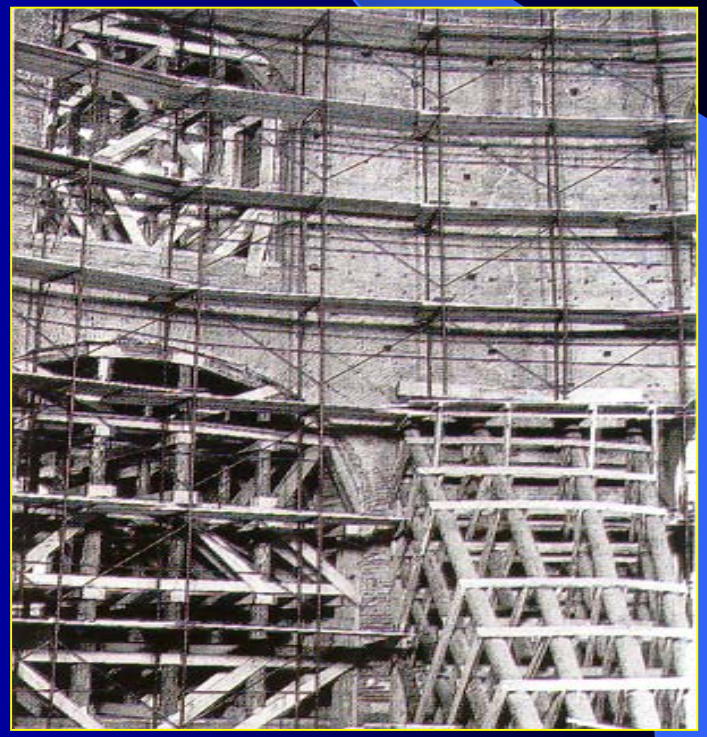

•Reconstruction

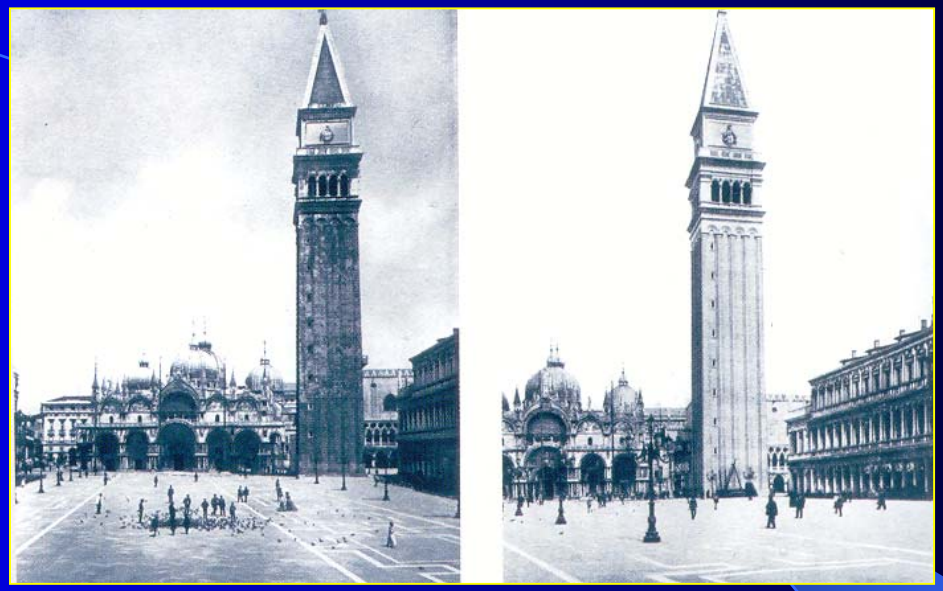

•Anastylosis

PROCEDURES FOR AN EFFICIENT INTERVENTION

The preparation of an intervention work **requires a series of decisions**. These should be codified in a **restoration project** according to appropriate **historical, technical and structural criteria.**

A restoration project is interdisciplinary work

The chosen intervention should respect the original function , ensure compatibility with existing materials, structures and architectural values

Methodology for monumental interventions (ECAE)

Phase	Information	Profession	
1st Phase DOCUMENTATION	Location Historical Records Function Architectural Elements Type of material and structural system Modifications Previous restoration works		Archeologists Architects Surveyors Geologists Geotechnical Eng. Chemical Eng. Structural Eng.
2nd Phase ENGINEERING STUDIES	Air quality Subsurface water Soil and rock properties Temperature variations Degradation phenomena Structural evaluation	Geologists Geotechnical Eng. Chemical Eng. Structural Eng.	
3rd Phase RESTORATION PLAN, DESIGN AND INTERVENTION MEASURES	Planning of the works Planning of the site Analysis and Design Alternative schemes of intervention Measures for Repair / Strengthening	Archeologists Architects Surveyors Geologists Geotechnical Eng. Chemical Eng. Structural Eng. Seismologist Art Technicians	

1st Phase DOCUMENTATION

Recognition of Original Material and Structural System

Distinct periods:

- Ancient
- Byzantine
- Post-Byzantine (Ottoman)
- Neoclassical Greek period

As a function of period

Original materials

- Marble
- Stone
- Wood
- Brick
- Cast iron

Original Structural Systems

- Articulated systems
- Masonry structures

2nd Phase ENGINEERING STUDIES

- In situ tests
- Laboratory tests
- Evaluation of degradation phenomena

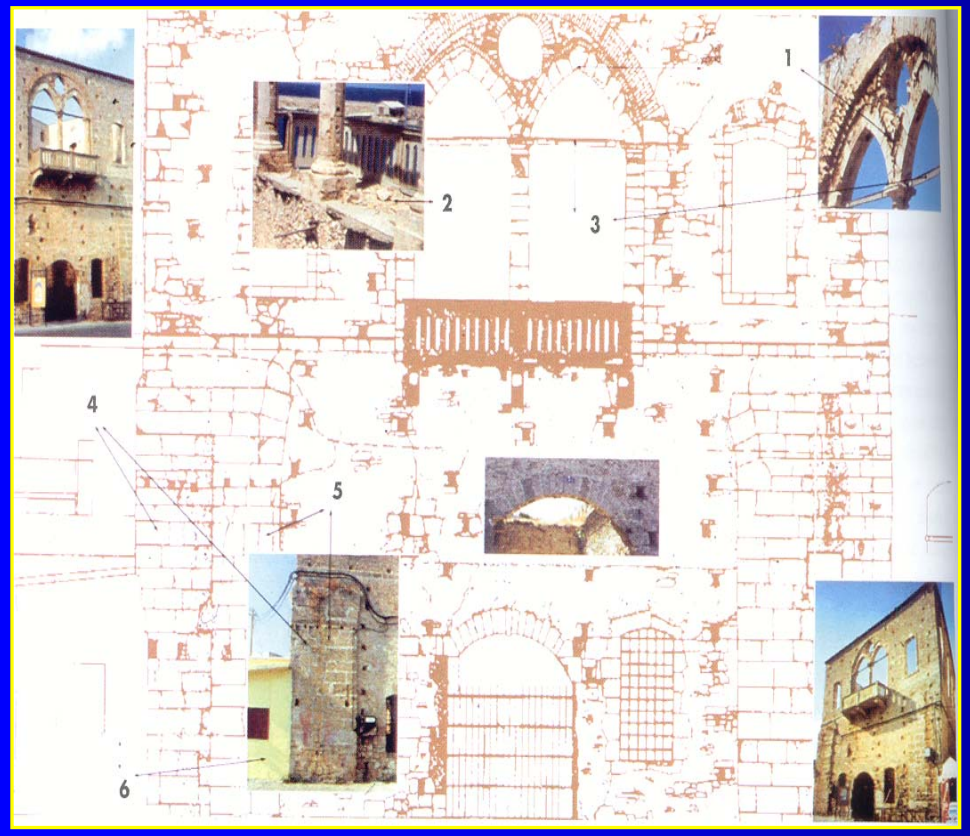

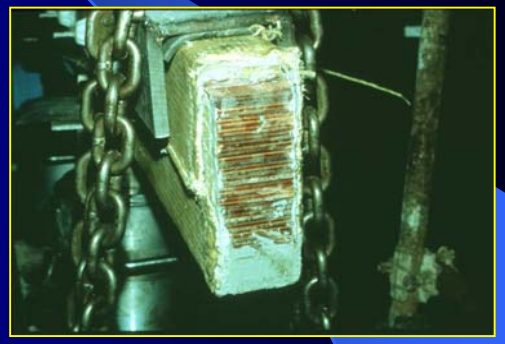

3rd Phase RESTORATION PLAN-

INTERVENTION MEASURES

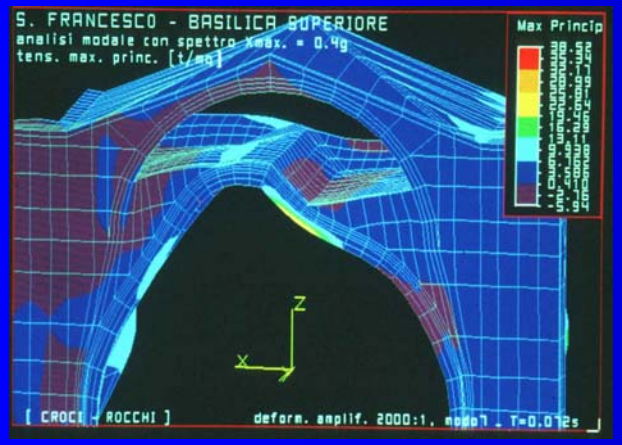

- Planning of the works
- Planning of the site
- Analysis and design
- Measures of retrofitting

STRUCTURAL CONCEPT OF RESTORATIONS

The structural concept of restoring old historical buildings is radically different from those of ordinary buildings

- Different materials
- Different load carrying systems
- Modification of the structural behavior with the passing of time

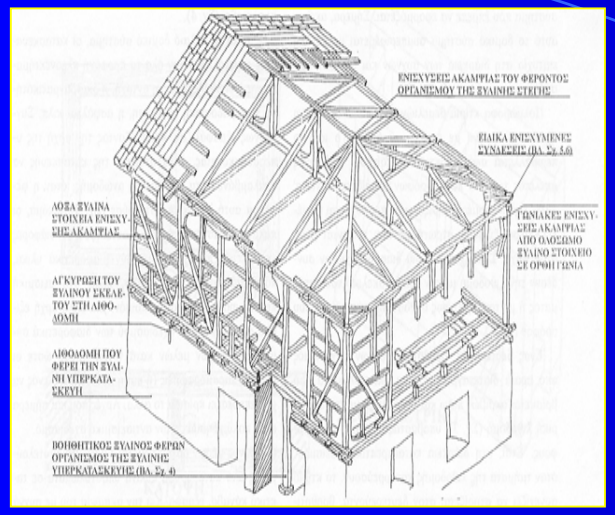
ΕΝΙΣΧΥΣΕΙΣ ΑΚΑΜΨΙΑΣ ΤΟΥ ΦΕΡΟΝΤΟΣ ΟΡΓΑΝΙΣΜΟΥ ΤΗΣ ΞΥΛΙΝΗΣ ΣΤΕΓΗΣ
ΕΙΔΙΚΑ ΕΝΙΣΧΥΜΕΝΕΣ ΣΥΝΔΕΣΕΙΣ (ΙΔ. Σχ. 5.6)
ΓΩΝΙΑΚΕΣ ΕΝΙΣΧΥΣΕΙΣ ΑΚΑΜΨΙΑΣ ΑΠΟ ΟΛΟΞΩΜΟ ΞΥΛΙΝΟ ΣΤΟΙΧΕΙΟ ΣΕ ΟΡΘΗ ΓΩΝΙΑ
ΛΟΞΑ ΞΥΛΙΝΑ ΣΤΟΙΧΕΙΑ ΕΝΙΣΧΥΣΗΣ ΑΚΑΜΨΙΑΣ
ΑΓΚΥΡΩΣΗ ΤΟΥ ΞΥΛΙΝΟΥ ΣΚΕΛΕΤΟΥ ΣΤΗ ΛΙΘΟΔΟΜΗ
ΛΙΘΟΔΟΜΗ ΠΟΥ ΦΕΡΕΙ ΤΗΝ ΞΥΛΙΝΗ ΥΠΕΡΚΑΤΑΣΚΕΥΗ
ΒΟΗΘΗΤΙΚΟΣ ΞΥΛΙΝΟΣ ΦΕΡΩΝ ΟΡΓΑΝΙΣΜΟΣ ΤΗΣ ΞΥΛΙΝΗΣ ΥΠΕΡΚΑΤΑΣΚΕΥΗΣ (ΙΔ. Σχ. 4)

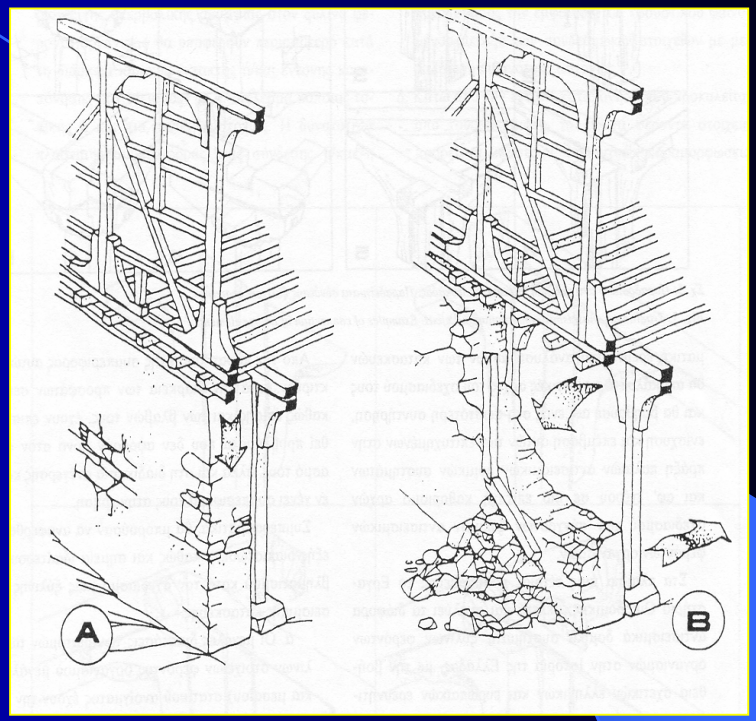
A
B

The structural restoration projects should respect the Venice Charter

•Restoration does not falsify the artistic or historic evidence

•When restoring monuments, use materials similar to that of the original

•Modern techniques and materials are admissible where adequate capacity cannot be ensured by traditional techniques. In this case durability and compatibility of the intervention should adequately proven.

•The principle of reversibility should be observed in restoration projects. The structural techniques should allow for removal or change without affecting the original.

•Classifying the actions of an intervention, it is better to preserve than to restore, to restore than to reconstruct, to reconstruct than to do nothing at all.

•The less you change, the better or the minimum intervention is the maximum protection.

•Respect the contribution of all periods to the building. In case of necessary replacements the missing parts must integrate harmoniously with the whole but at the same time must be distinguished from the original.

General Philosophy of Structural Restoration of Historical Monuments

Recognition of the Original Material and Structural System

↓

Evaluation of Factors Causing Damage or Deterioration

↓

Diagnosis of Deterioration Procedures (failure mechanisms, crack pattern)

↓

Analysis and Design (modeling, type of analysis, dimensioning)

↓

Restoration Measures (alternative schemes of repair / strengthening)

↓

Reanalysis with New Strengthened Structure (evaluation of the effectiveness of restoration solution)

↓

Cost – Benefit Analysis

Evaluation of factors causing damage or deterioration

Man –made:

- Wars
- Vandalism
- Ignorance
- Modernization
- Pollution

Damage

Deterioration

Natural:

- Extreme heat
- Humidity
- Insects
- Earthquakes
- Explosion

Damage caused by static or dynamic loading

STATIC ACTIONS

- Direct — Extreme loading dead/live
- Indirect — Soil settlements, temperature variation

DYNAMIC ACTIONS

Earthquakes

Explosions

Ambient vibration

DIAGNOSIS OF DAMAGE

The crack pattern act as a guide for the evaluation of damage

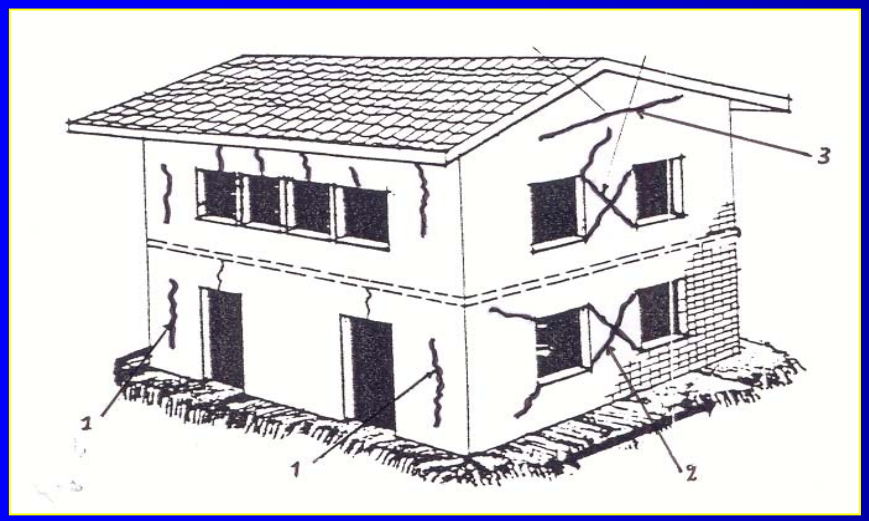

The observation of the effects of real earthquakes is fundamental in order to understand the seismic behavior of monuments

Observed damage typology in Italian Medieval Monuments

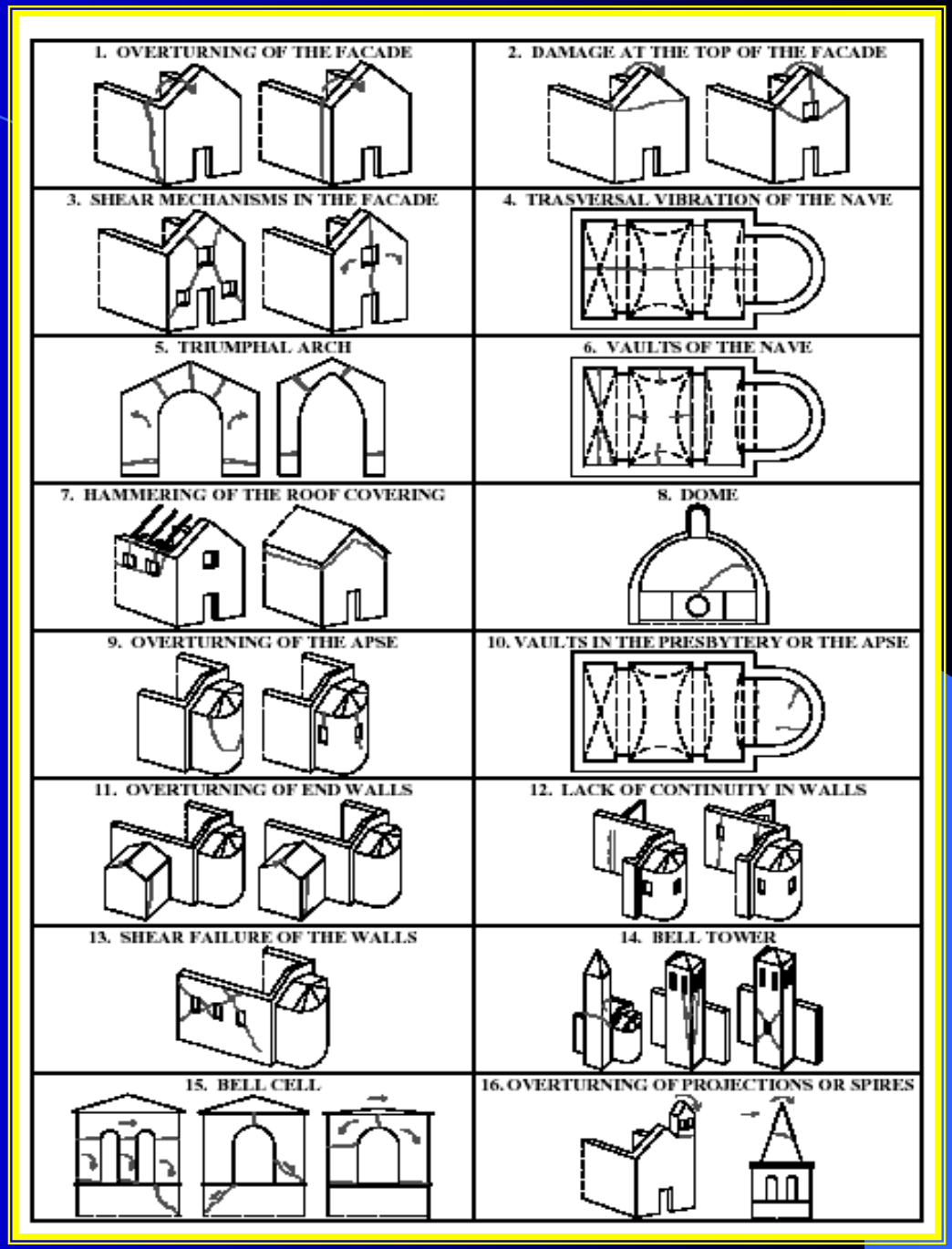

Observed damage typology in Greek

Byzantine Churches

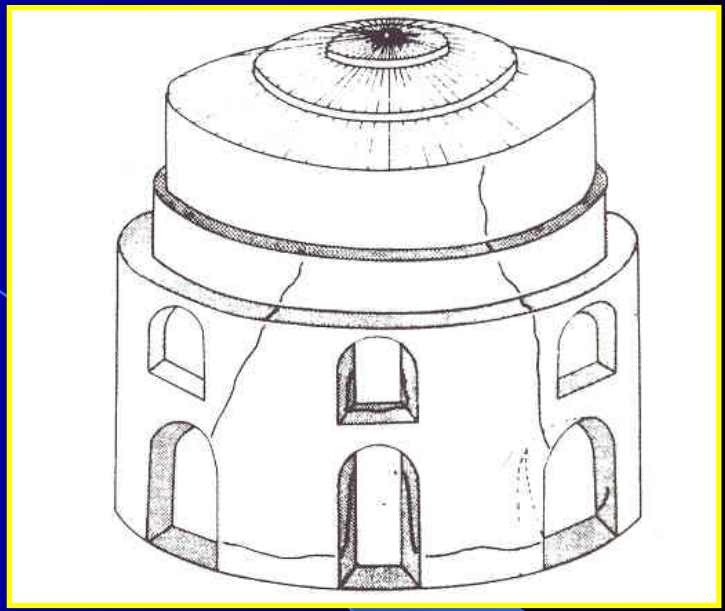

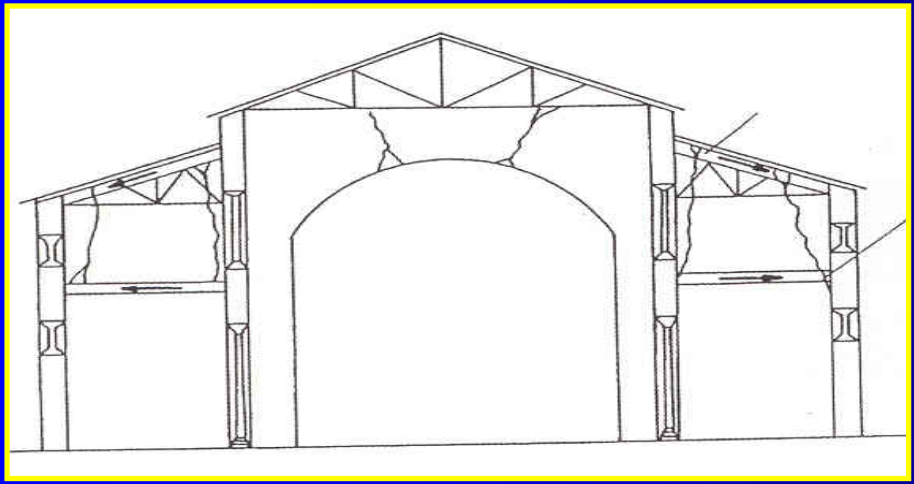

PRINCIPLES OF ANALYSIS

The basic problem in analysis of such buildings is the unknown mechanical properties of materials which are necessary for the formulation of the constitutive laws mechanical models

Great variation of strength as a function of period

Mortars		
Period	**Strength (kg /cm^2)**	**Binders**
Roman	25-35	Lime + Pozzolan +soil
7th cent AD	35 -50	Lime + Pozzolan +Brick dust
Ottoman	10 - 15	Lime > 40 %
18th cent AD	10 - 15	Soil +lime
19th. cent AD	Depend on cement content	Lime +cement
Bricks		
Period	**Monument**	**Strength (kg /cm^2)**
19 th. Cent. AD	Casa Bianca	100 - 210
19 th. Cent. AD	Mouson	80 - 100
19 th. Cent. AD	Mellisa	100
19 th. Cent. AD	ΟΥΘ	100 - 250

Modulus of elasticity

Tensile strength

Compressive strength

Poison ratio

1) In situ investigations, including:

- Structural and geometrical survey using conventional surveying or photogrammetry methods.
- Surveying of the damage.
- In situ destructive test (e.g. core taking).
- In situ non – destructive tests (e.g. ultrasonic tests, ambient vibration tests).
- Monitoring of cracks using proper measuring and acquisition systems.
- In situ geotechnical investigations (excavation, bor-holes).

Core taking from masonry structures

Ultrasonic tests

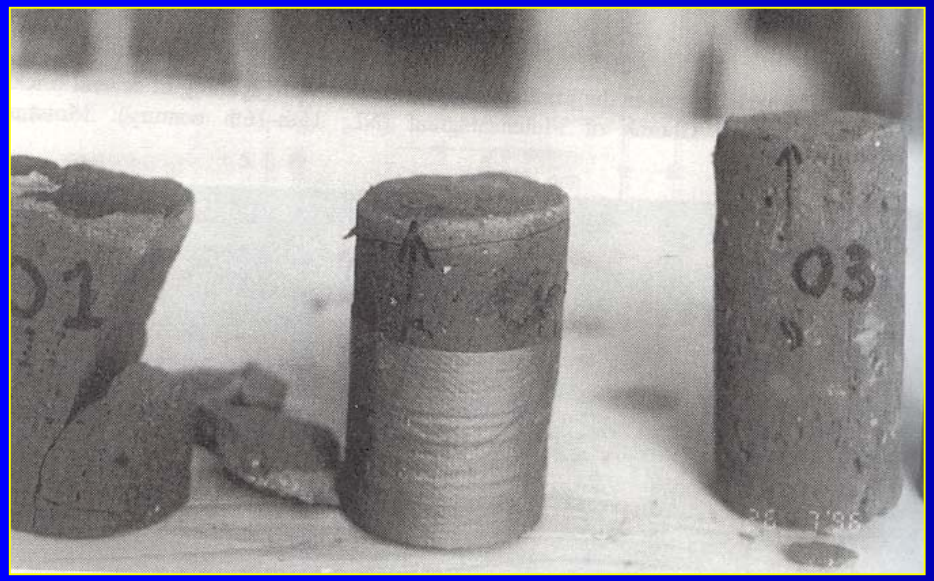

Monitoring of cracks with glass ´´witness´´

Monitoring of cracks with modern acquisition systems

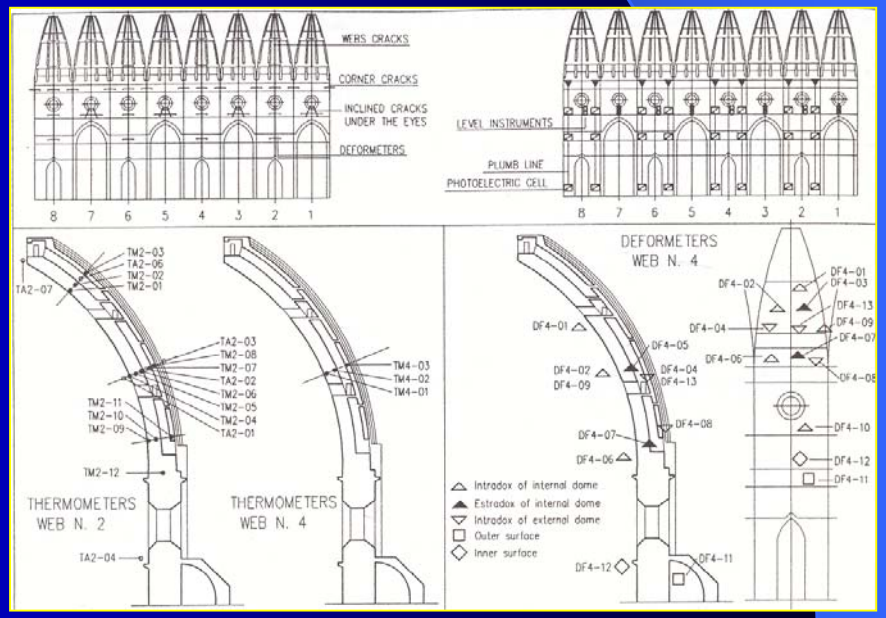

2) Laboratory tests, including:

• Determination of the physical, chemical and mechanical properties of the original materials.

• Determination of the mineralogical composition of mortars and grouts in order to obtain compatible materials.

• Geotechnical tests on extracted soil sample.

• Experimental investigation on prototype models (e.g. dynamic tests on shake tables simulating the condition of real earthquakes, measurements of dynamic properties of the prototype structure)

Laboratory simulations on prototype models

Elements necessary for the development of mechanical models:

•Determination of the constitutive laws of the original materials (σ-ε curves, σ-τ curves, M-θ curves, e.t.c.).

•Determination of the dynamic response characteristics as fundamental period, damping.

Loading conditions:

• Determination of gravitational loadings considering all the dead and possible live loads (as a function of future use) acting on the structure.

• Determination of seismic safety level through design spectrum, considering the seismic risk of the area through microzonation studies.

• Combination of loads as provided by current codes. Special consideration should be made for the evaluation of real live loads in order to result realistic stresses conditions in elements.

Loading

Gravitational loading

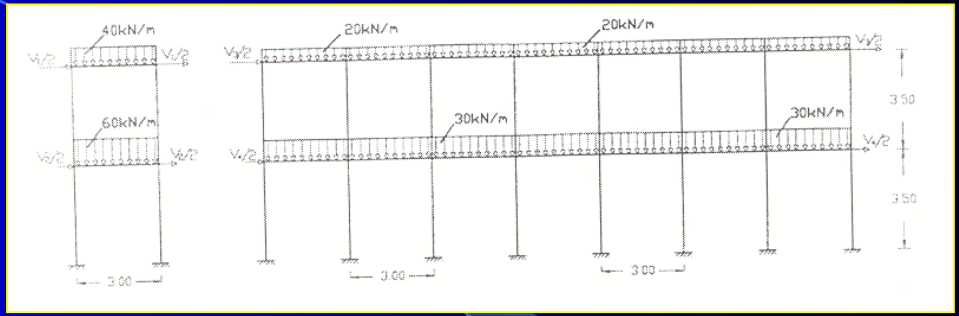

Spectral loading

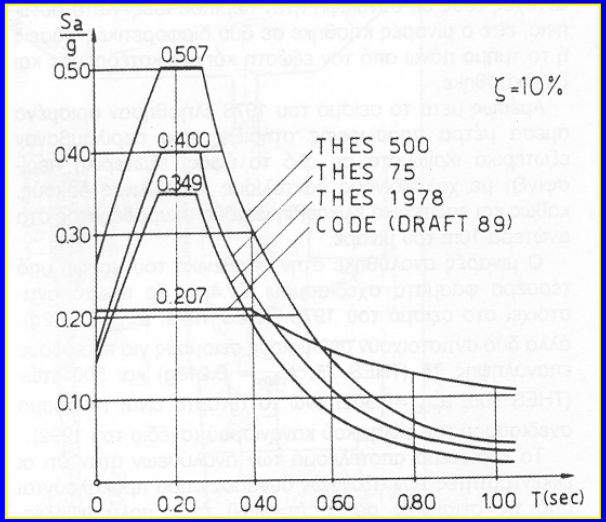

Seismic loading

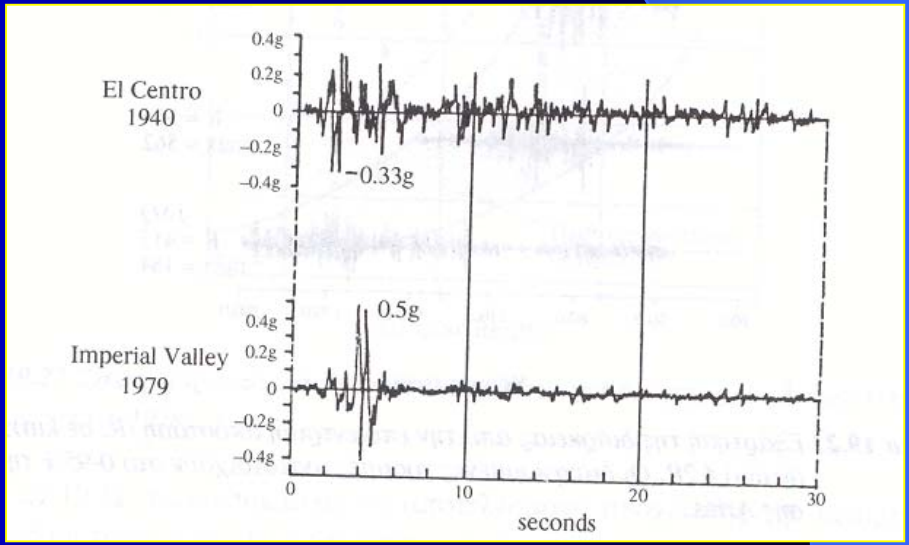

Types of analysis

- Static analysis with linear elastic laws using frame or shell elements
  - Dynamic analysis with linear elastic laws using frame or shell elements

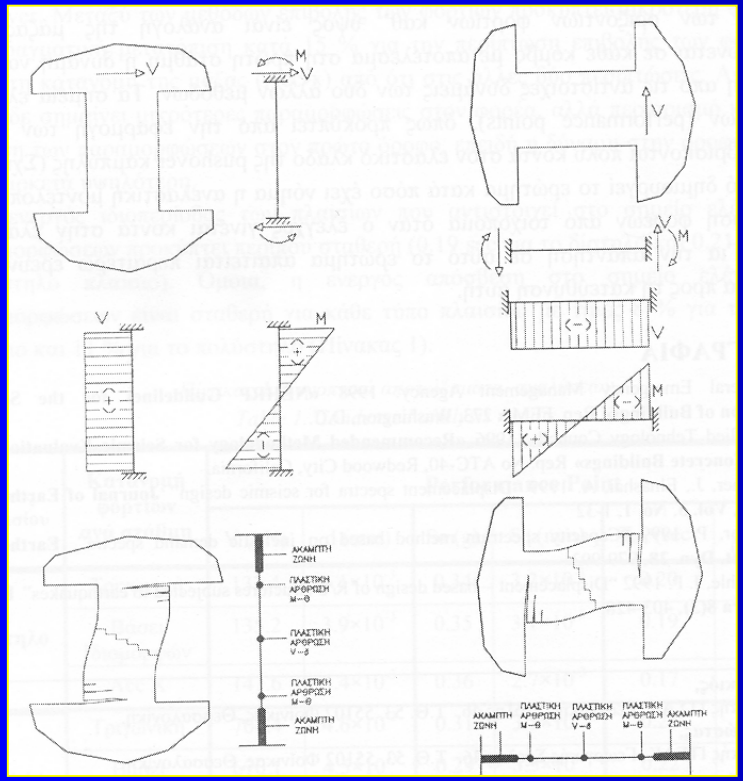

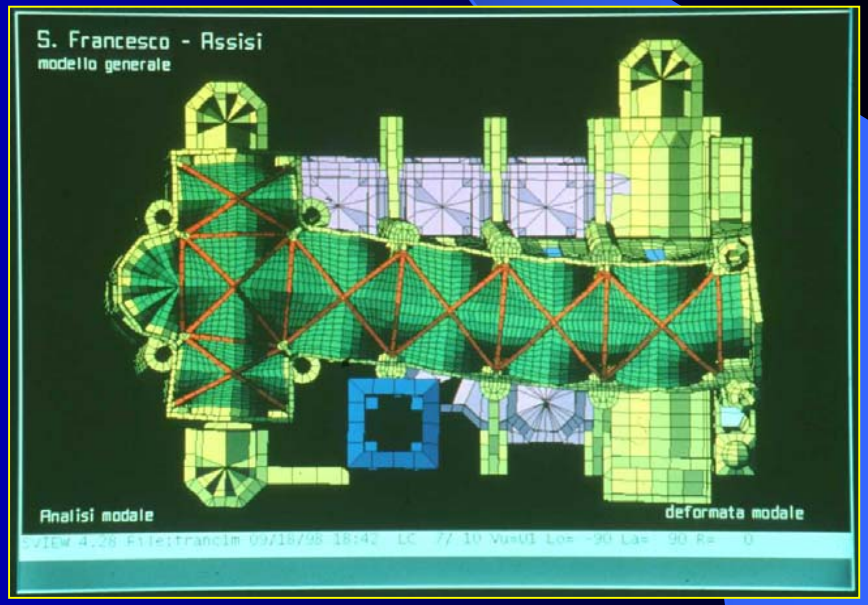

• Push over analysis with inelastic laws in order to evaluate the critical collapse mechanism

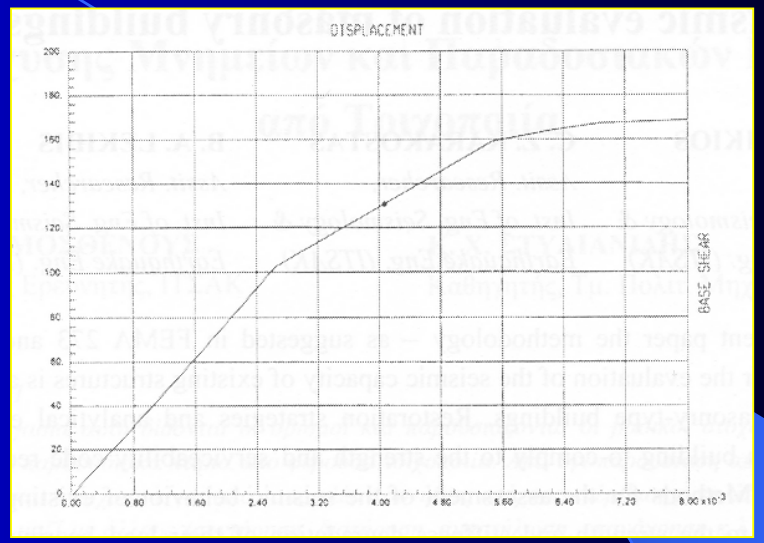

• Time history analysis using selected seismograms in order to evaluate and simulate the ´´possible real´´ collapse mechanism

• Finite element analysis considering different types of mechanical laws

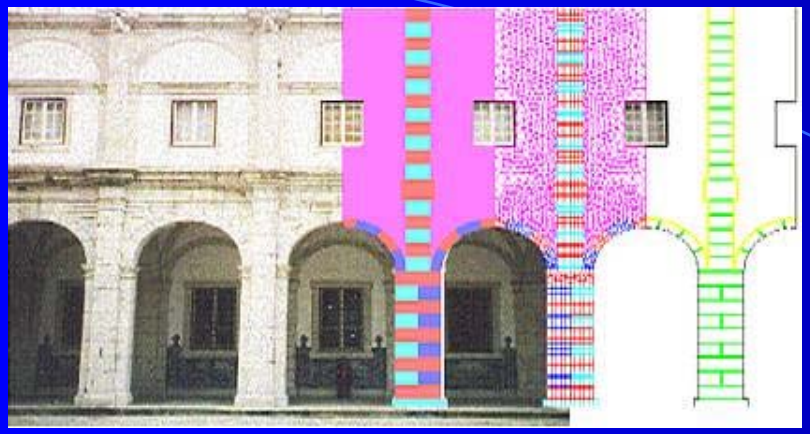

F.E.M analysis

is a complex method, cumbersome to be used in practical restoration projects. Often unreliable due to great variety of uncertainties regarding the mechanical models

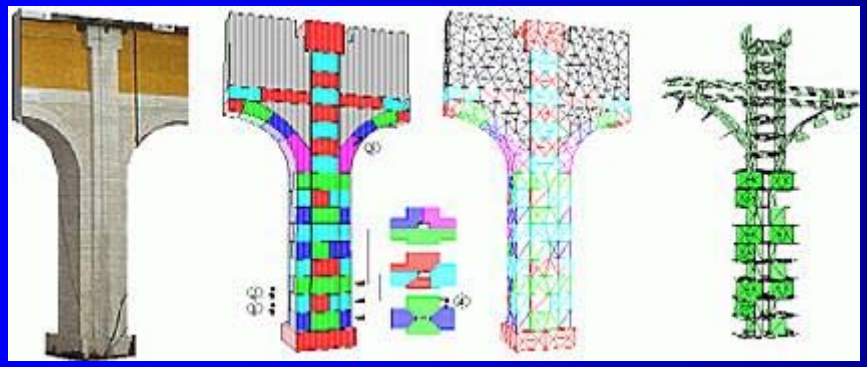

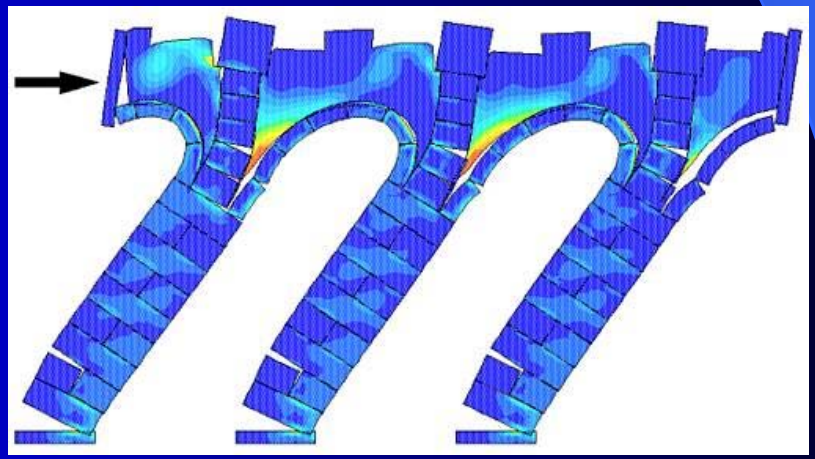

RESTORATION MEASURES

Strategies regarding structural restoration of Monuments

A general view

Local modifications

Global modifications

Reducing of building's mass

Reducing of seismic forces

Local modifications

Global modifications

Reducing

seismic energy

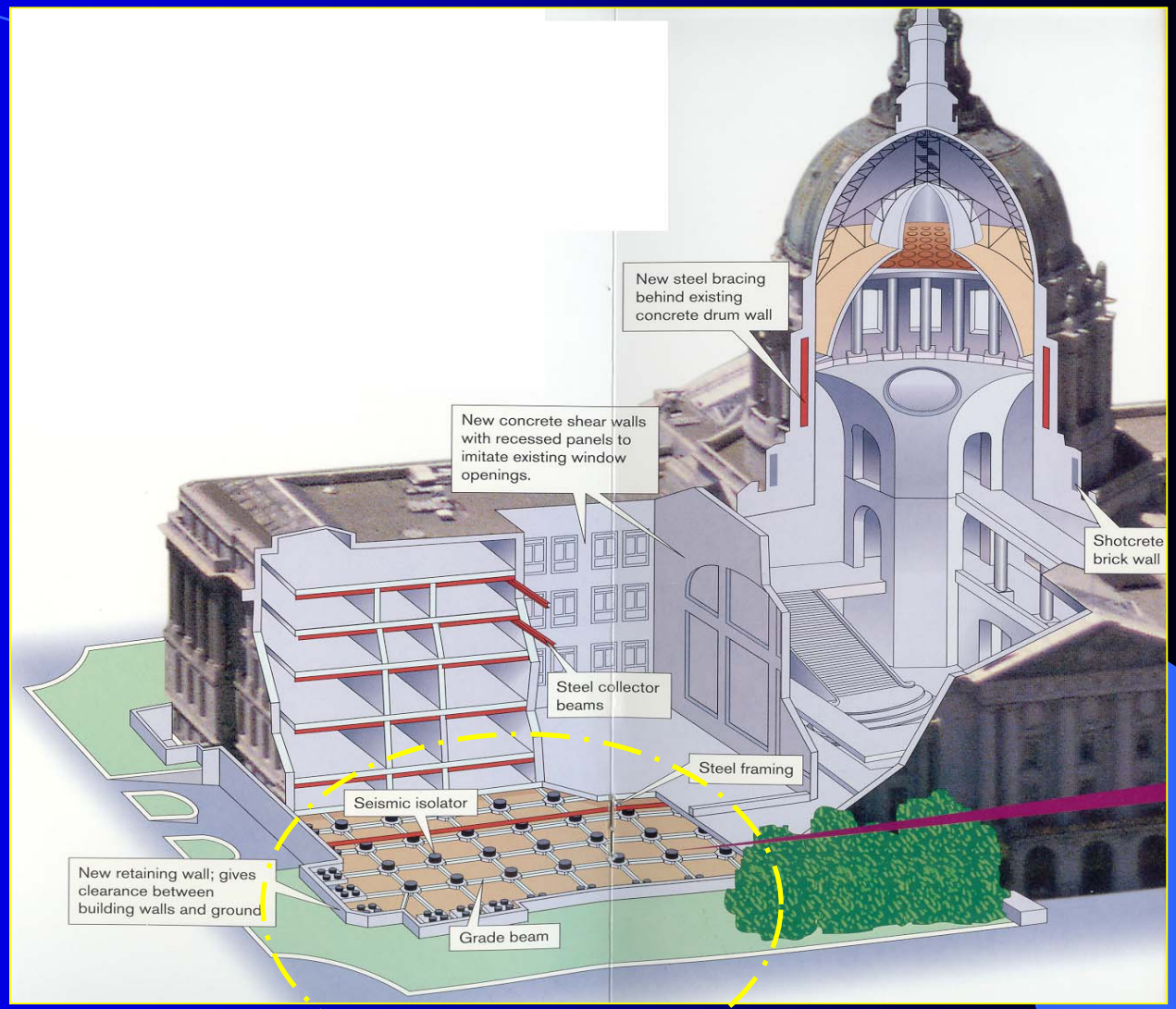

Restoration Strategies taking into account the type of action that produces the damage:

Damage coming from direct static actions

- Simply strengthening of the original material
- Local strengthening of vital structural elements
- Global strengthening of the whole structure with a modification of the initial load carrying system

Damage coming from indirect static actions

- Improving soils behavior
- Modifications of the pressures under foundations
- Stabilization of soil – foundation - structure system
- Creating joints in specific points

Simply strengthening by

deep rejoining

Modification of the original structural system

Stabilization of

soil – foundation - structure system

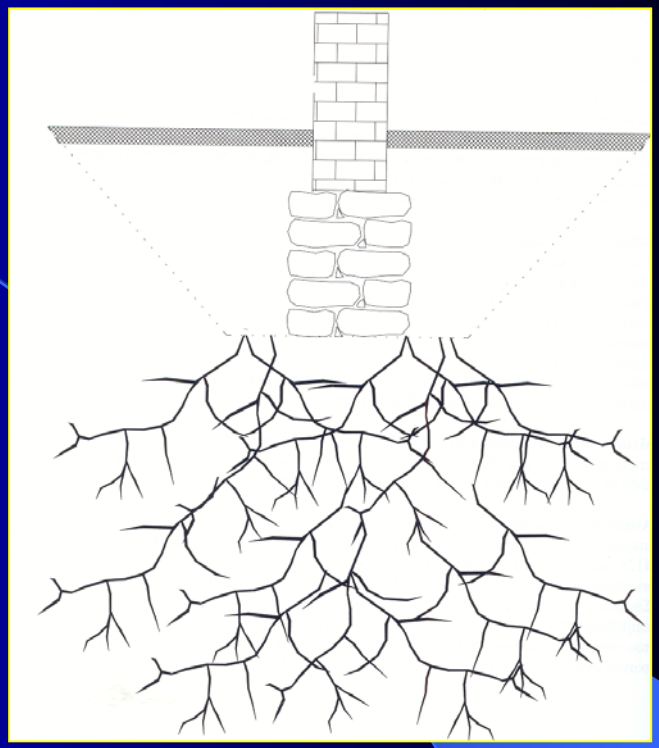

Improving soils behavior

Damage coming from dynamic actions

- Improving structural behavior with local or global modification of structural system.

- Modification of the initial seismic response inserting special devices.

MODERN TECHNIQUES AND MATERIALS

The main philosophy is to choose suitable constructional techniques and materials compatible, as possible, with the original one.

Classifying according to the mode of application:

Reversible techniques (Gentle)

easy replaced without damaging the original system

Irreversible techniques (Drastic)

replaced with damaging the original system

Reversible Techniques

Foundation

-Underexcavation, for example modifying the pressures under the foundation increasing the soil deformability in the zones where the settlements are smaller than the others (materialized in the retrofitting of Pisa Tower, Italy).

-Improvement of the soil's behavior (e.g. soil nailing, grouting)

Masonry

-Confinment of masonry with linear steel bars.

-Reinforcement of masonry wall with steel ties.

-Rings at the base of domes.

-Ties at the springs of arches.

-External prestressed or simple buttresses.

- Repairing and strengthening the existing elements.

-Using structural steelwork as a primary load carrying system

keeping the exterior and interior masonry walls.

Confinment of masonry with linear steel bars.

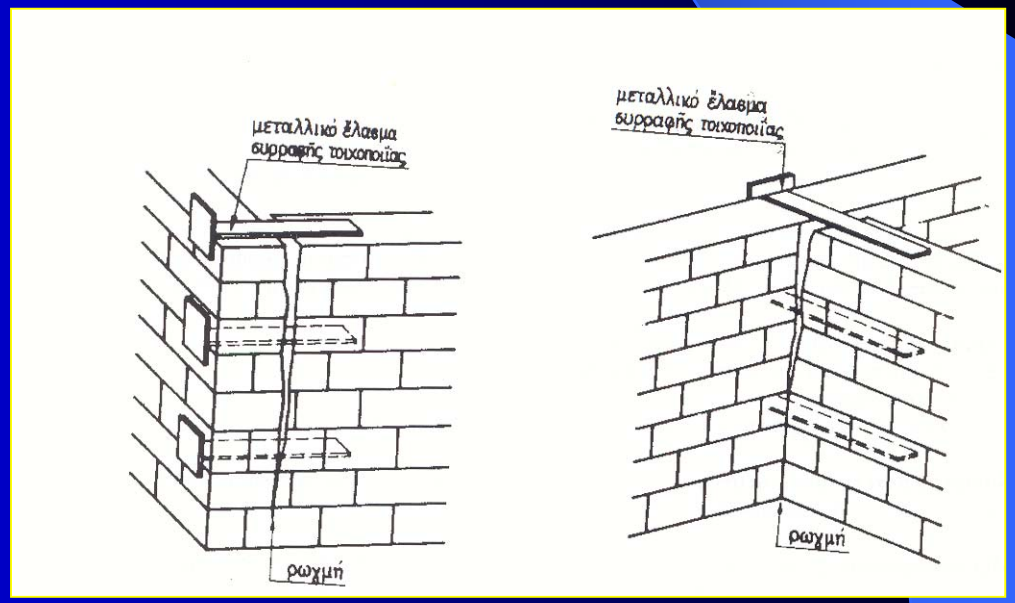

Reinforcement of masonry wall with steel ties.

Rings at the base of domes.

Ties at the springs of arches.

Steel ties

Steel truss elements

Anchoring of steel presstresed elements

Steel tendons protected with zinc

Repairing and strengthening the existing elements.

Timber

-Strengthening of an existing wood element (beam, roof) with steel plates.

-Rehabilitation of an existing wood element with a new one.

-Improvement of an existing wood diaphragm with steel or new timber elements increasing the strength and stiffness.

Improvement of an existing wood diaphragm with steel or
new timber elements increasing the strength and stiffness

Irreversible Techniques

Foundation

-Modification of existing foundation system adding new R/C elements.

-Enlargement of the actual foundations

-Underpinning

-Base isolation

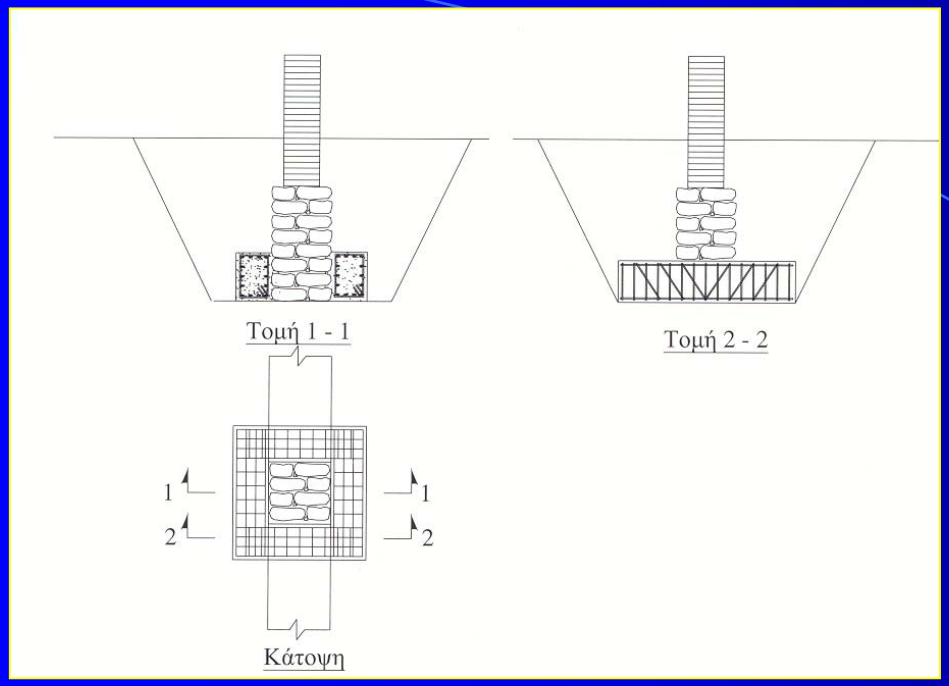

Modification of existing foundation system adding new R/C elements

Enlargement of foundation

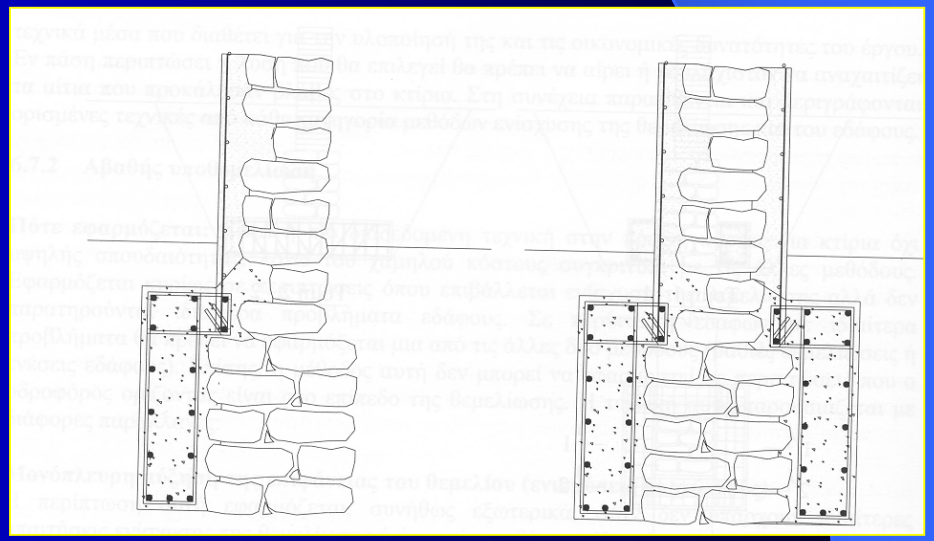

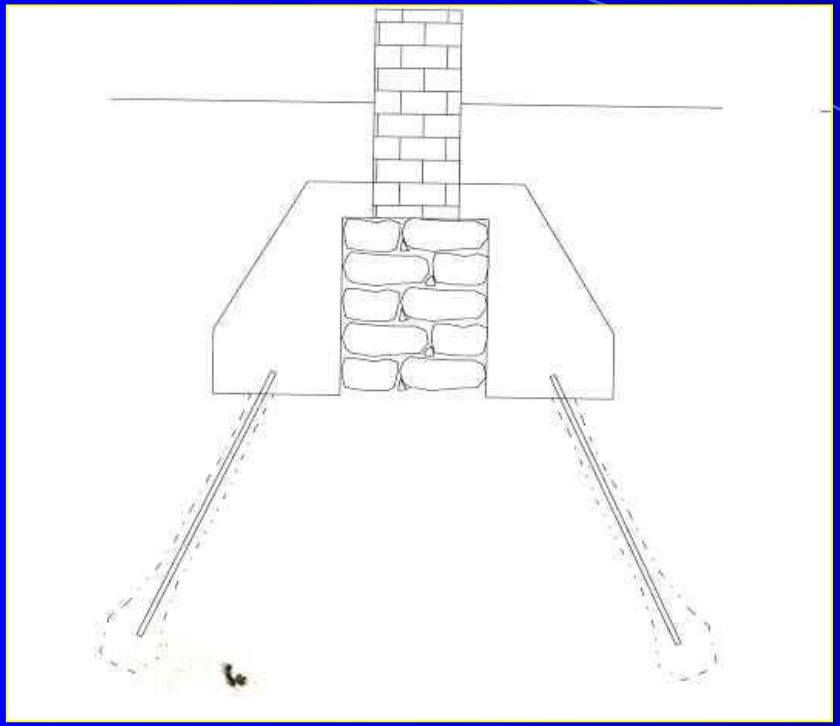

Enlargement of foundation

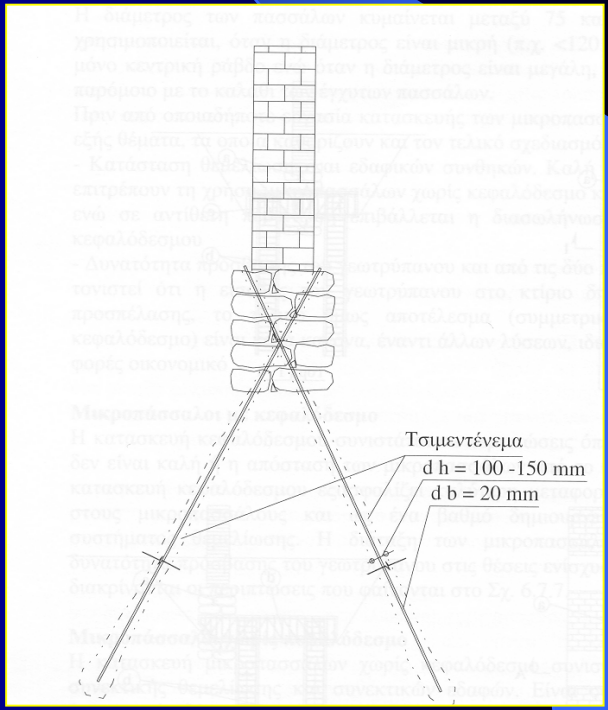

Underpinning

Masonry

-Grouting and / or bonding new bricks.

-Injection of epoxy resins in cracks and / or deep rejoining.

-Rebuilding of a small, medium, or high part of a masonry wall.

-Jacketing with gunite techniques.

-Insertion of new R/C elements (beams, columns) at selected points (e.g.corners)

- Insertion of steel elements modifying drastically the original system

  - Confinment with fiber elements bonded on site with special epoxy adhesives in order to increase the tensile strength.

  - Replacement of an existing timber slab with R/C one.

  - Replacement of the whole structure keeping only the traditional façades

Injection of epoxy resins in cracks and / or deep rejoining

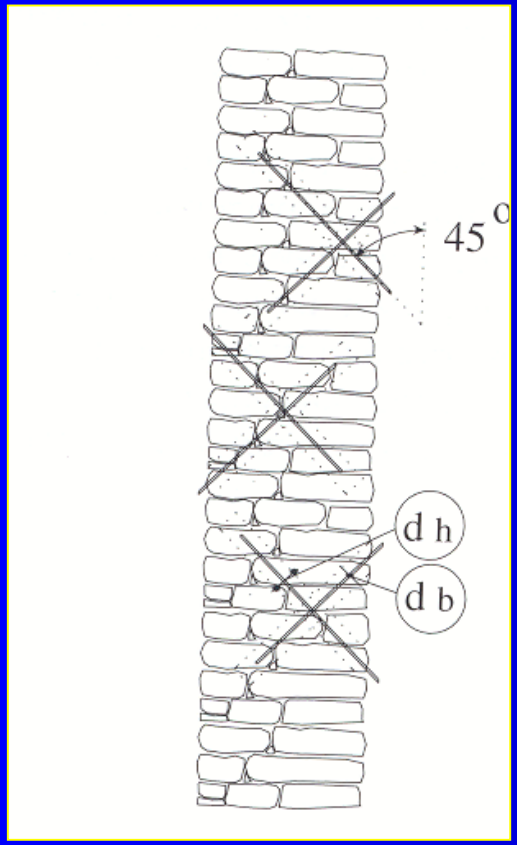

Grouting with epoxy resins or high strength compatible mortars

Injection of epoxy resins in cracks and deep rejoining

Jacketing with gunite techniques.

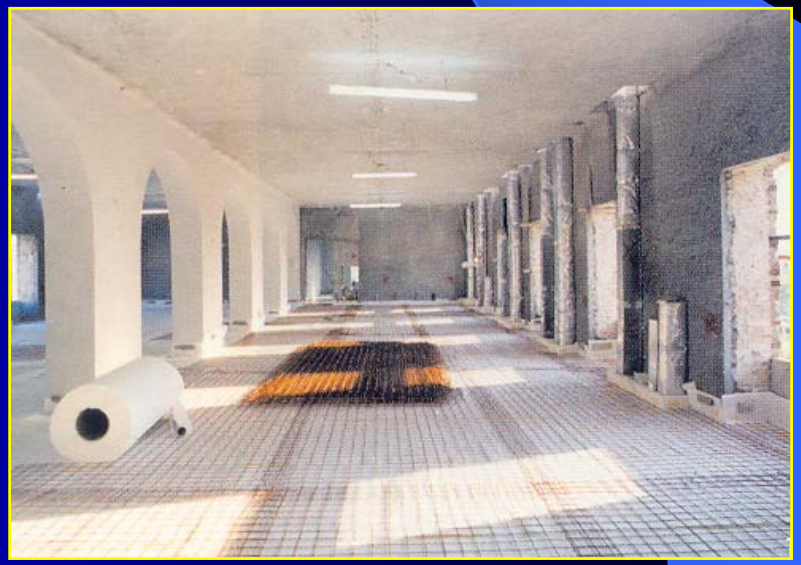

Insertion of new R/C elements (beams, columns) at selected points (e.g.corners)

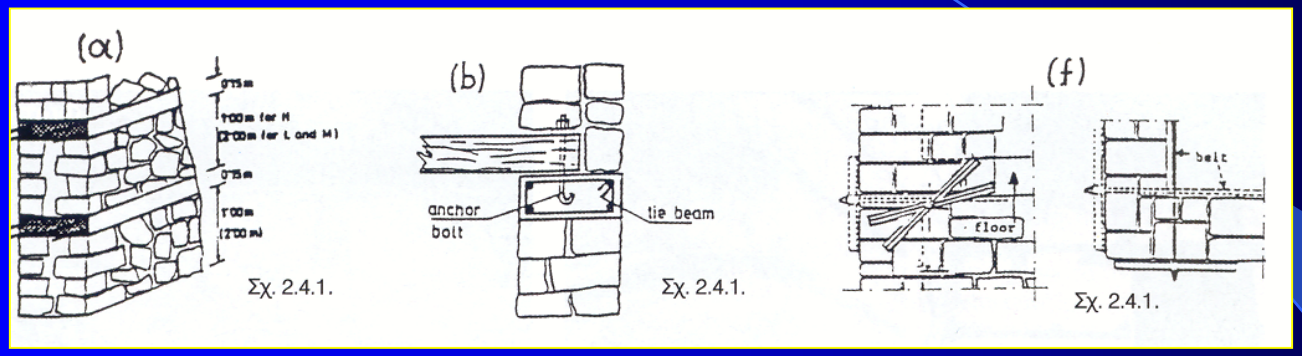

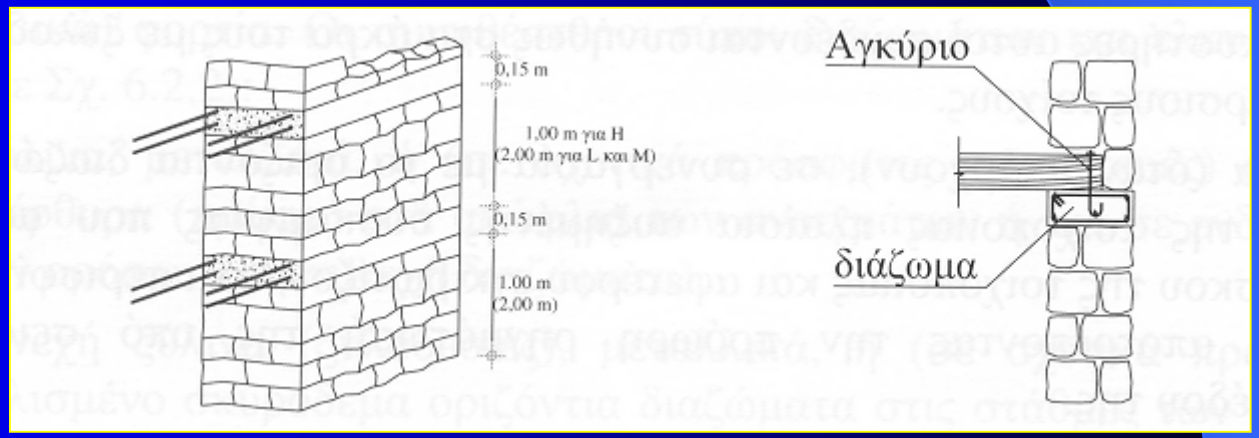

Insertion of new R/C elements

Insertion of steel elements modifying drastically the original system

Replacement of the whole structure keeping only the traditional façades


ΤΕΙ Α.Ε.
ΤΕΙ ΑΕΤΕΡ

Confinment with fiber elements

Timber

-Replacement of a timber roof with R/C slab.

-Injection of epoxy resins in cracks.

-Strengthening of timber elements using fiber bars

-Jacketing with gunite techniques.

-Insertion of new R/C elements (beams, columns) at selected points (e.g.corners)

Insertion of new R/C elements (beams, columns) at selected points

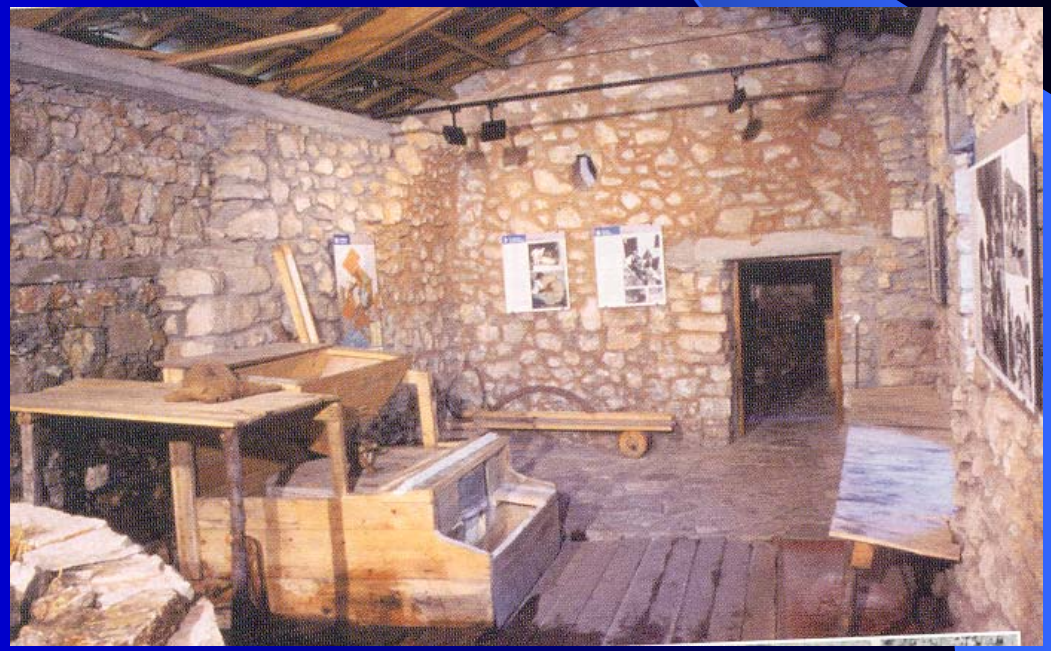

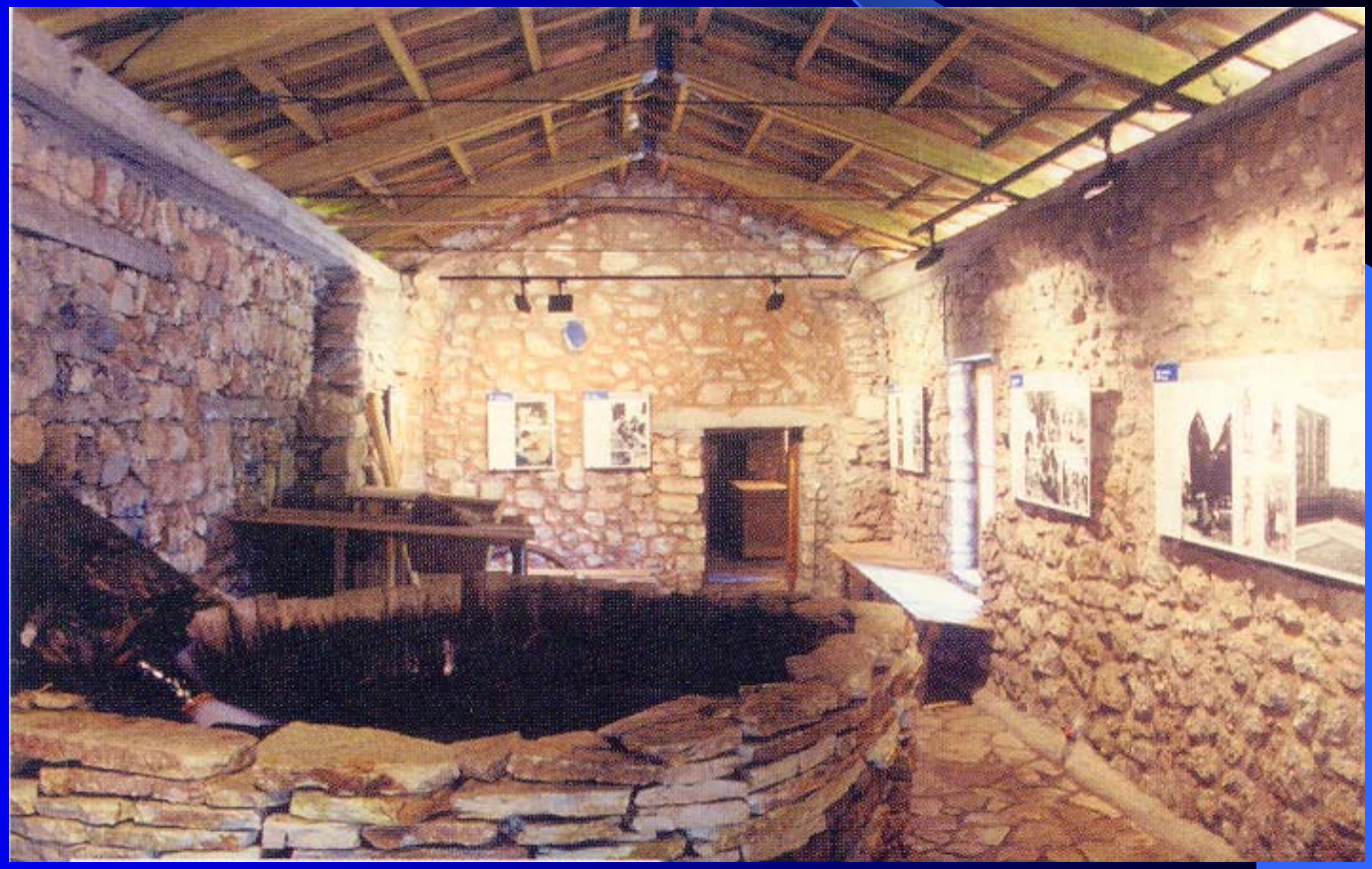

Strengthening of timber elements using fiber bars

Classifying according to the type of intervention:

Repair is maintaining of a structure in order to extend its lifetime after a man-made or natural loading

Strengthening is maintaining and reinforcing of a structure in order to extend its lifetime after a man-made or natural loading

Repair techniques

Deep rejoining

Injection of epoxy resins

Steel Reinforcing ties

Strengthening techniques

Improving of soil behavior

Improving of foundation system

Passive isolation systems

Jacketing the original system with R/C or fiber elements

Creation of diaphragms at the storey /roof level

Insertion of tendons, rings, steel bars.

Materials used in restoration works:

Cementious materials

-Portland cement mortars and grouts

-Lime cement mortars and grouts

-Pozzolanic mortars and grouts

-Epoxy resin mortars and grouts.

Synthetic materials

-Glass fibers.

-Carbon fibers.

-Aramid fibers.

Characteristic properties for synthetic materials

Type	E (GPa)	$\sigma_{tensile}$ (Mpa)	ε (%)	Aprox. Cost (euros)
Glass fibers	81.0	3400	4.90	45.0
Carbon fibers	160.0 – 270.0	1400 - 6800	1.0 – 2.50	55.0
Kevlar 29 fiber	62.0 – 83.0	2800	3.60 – 4.0	30.0
Aramid fibers	120.0	3000	3.0	45.0

Mechanical properties for composite materials (fiber and resin)

Composite material	E (GPa)	$\sigma_{tensile}$ (Mpa)
Glass - resin	35.0	400 – 1500
Carbon – resin	140.0	800 - 3000
Aramid - resin	60.0	1400

Fibers application on masonry structures as a function of stressing

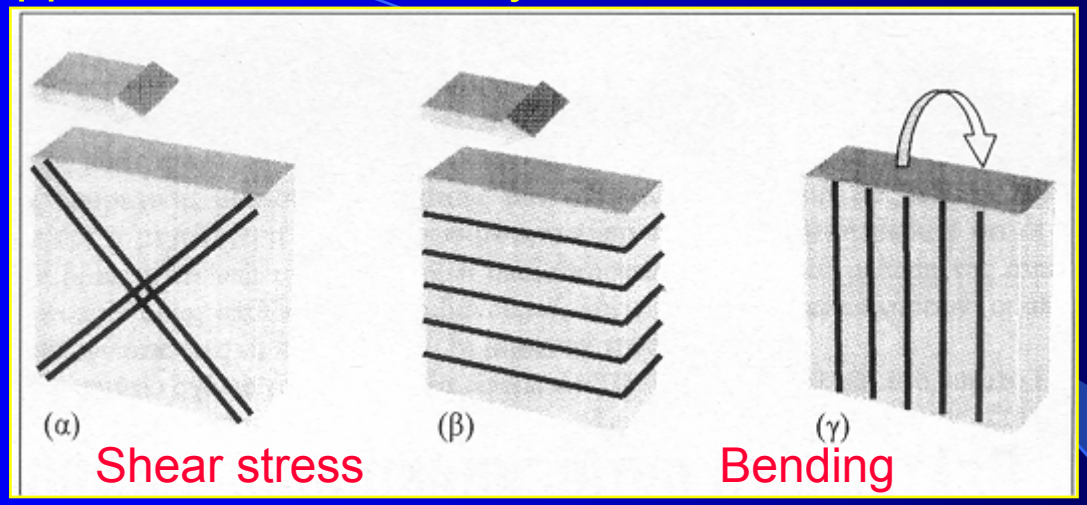

Fibers application on wood elements

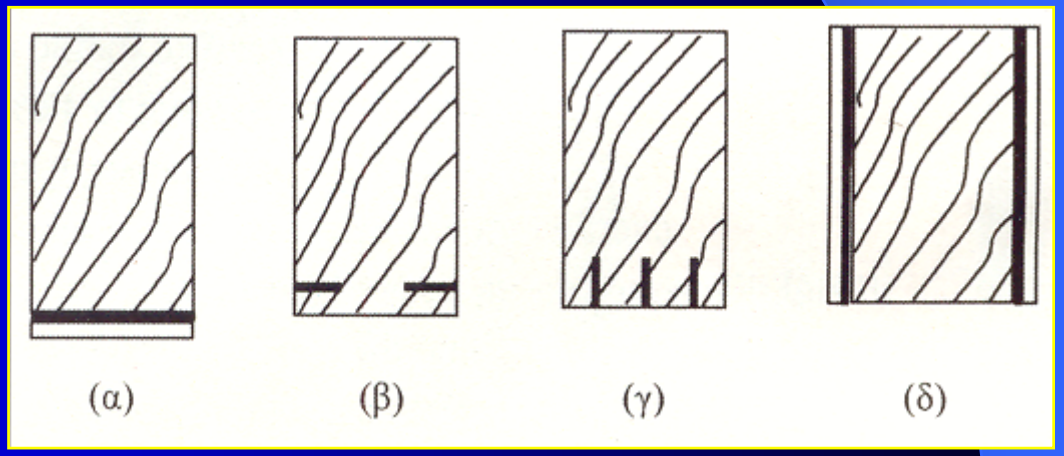

Metallic materials

-Stainless steel, which can be normal steel protected with zinc,epoxy-resin or other chemical material against corrosion or steel with special composition (Ch-Ni-No).

-Titanium bar members, which have exceptional anticorrosive properties.

Other elements treated as materials

-Rubber bearings or friction pendulum bearings.

-Hydraulic / hysteretic dampers.

-Shape memory alloy devices, SMAD.

Rubber bearings

Dampers

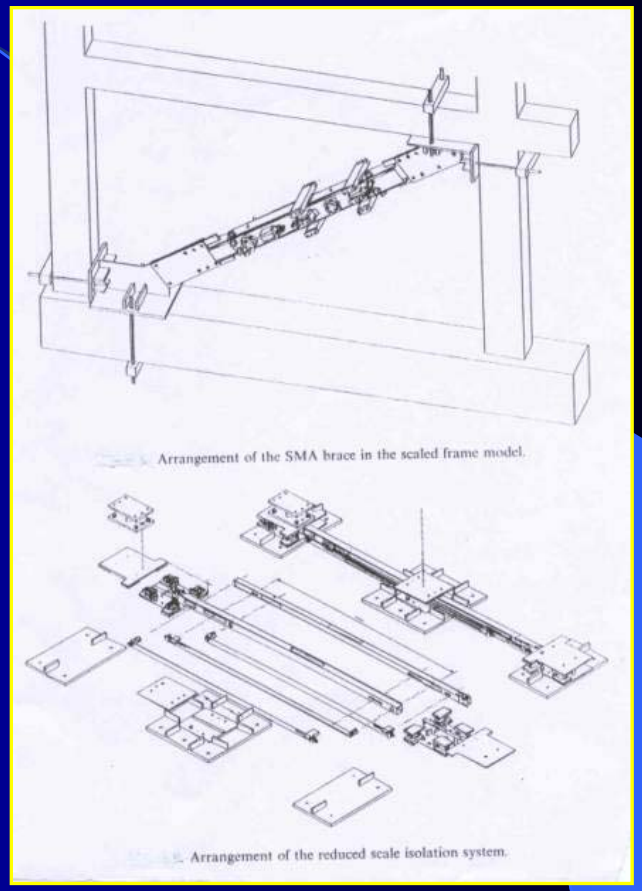

Shape memory alloys systems

CASE STUDIES OF GREEK HISTORICAL MONUMENTS

Restoration of ancient monuments

Restoration of ancient monuments → Anastylosis

Case of Acropolis ancient complex from Athens

28 years of restoration works

Parthenon 447 – 438 B.C.

Erehthion 420 B.C

The Tample of Athina Nike 420 B.C

Propilaia 437-432 B.C

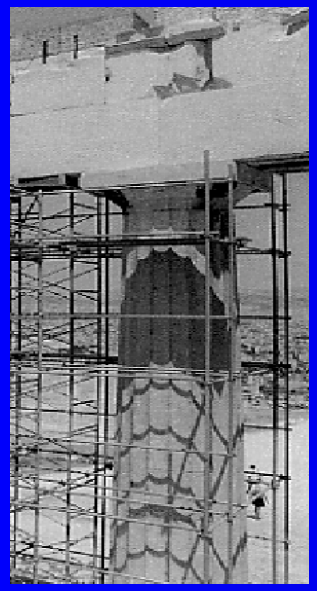

Dismantling the columns and colonnades the damaged parts undergo restoration

Dismantling action

Restoration on the ground

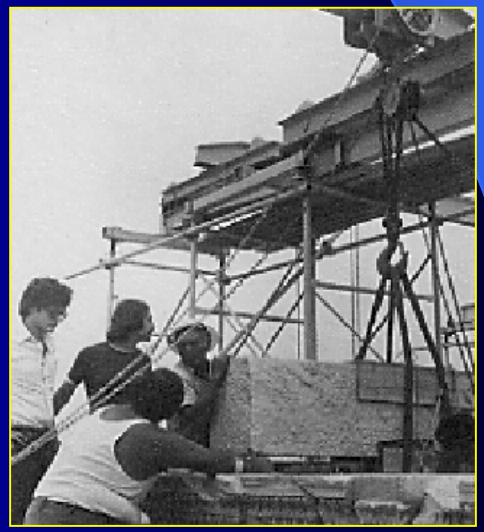

Erehtion under restoration (1981 – 2003)

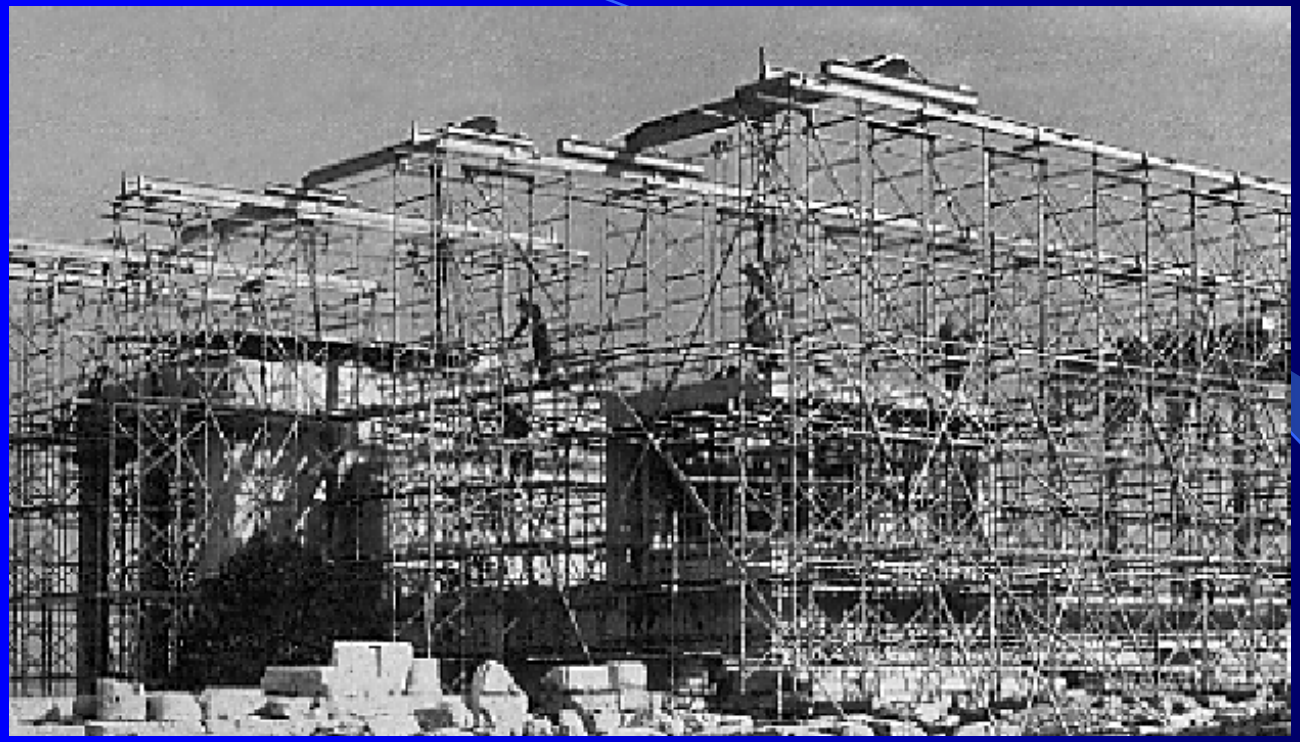

Propilaia under restoration (2000)

Analysis of ancient Greek monuments

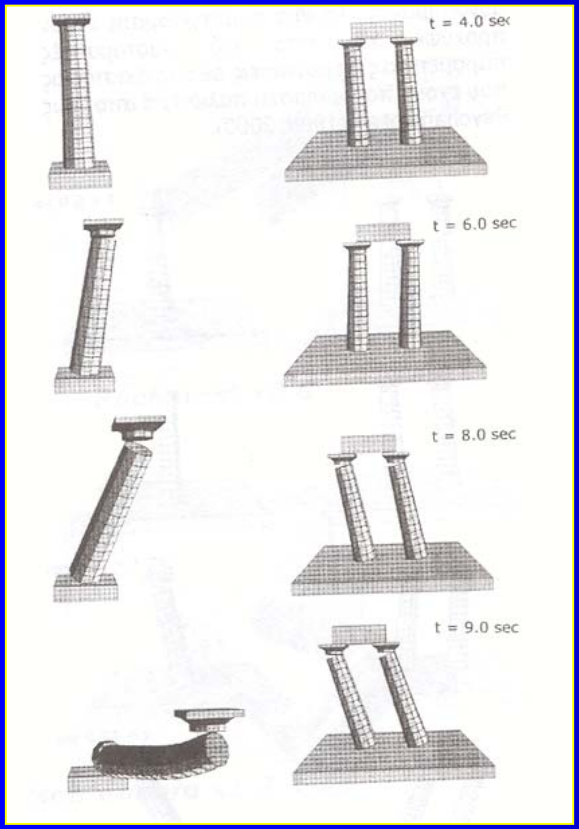

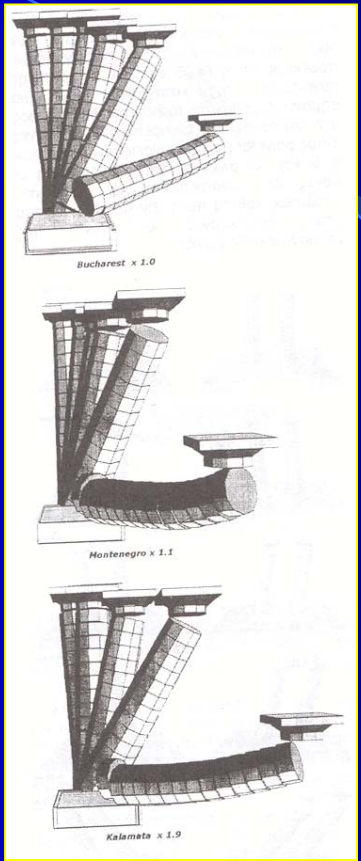

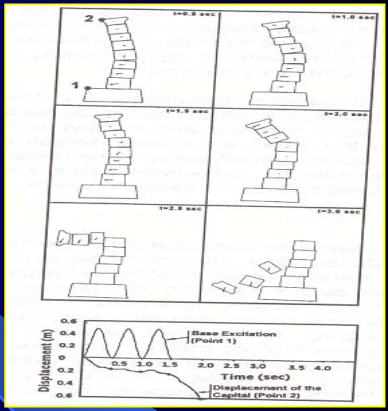

Restoration of Byzantine churches in Thessaloniki

An earthquake in 1978 damaged some Byzantine monuments which needed an urgently intervention in order to safe guard these values

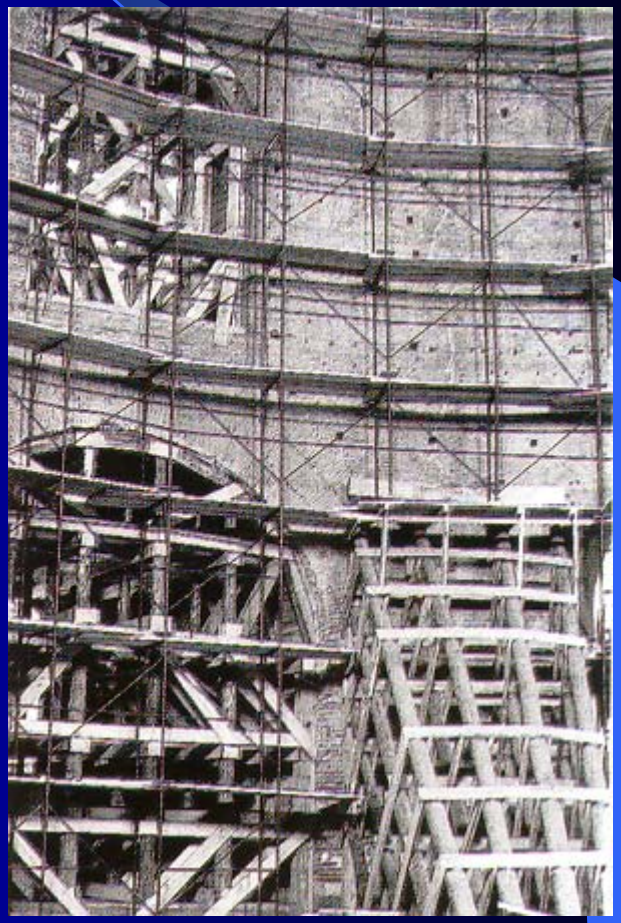

St Pantelimon Church

The collected experience of interventions on Thessaloniki's monuments

The first step was the suitable propping due to stability problems, using external timber propping, erecting steel propping systems in order to ensure the possibilities of extensive investigations of damage, as well as, the repair and strengthening works, application of provision prestressed tendons or rings avoiding further displacements

The second step was the detailed surveying of damage, monitoring of deformations using extensometers or glass ´´witness´´ measuring vertical / horizontal displacements and the evolution of cracks, in situ and laboratory investigation concerning the evaluation of the mechanical and chemical properties of the original mortars and bricks in order to recompose such materials for the intervention stage.

The third step was the evaluation of damage. It was observed that the higher part of the monuments suffer more pronounced cracks as compared to the lower one, due to the fact that vaults creates pressures and as a consequence developing deformations in masonry walls. The phenomenon was produced due to strength reduction of the original system as the time was passed, also in case of seismic action aggravating the situation. Geometry of monument is an important damage factor. For instance, towers and minarets are slender structures sensible to soil settlements and vertical seismic excitations.

The forth step was the analysis and design of intervention schemes. A very difficult task is the modeling of the structure. Generally, arches, masonry walls, timber members are modeled as beam elements and the soil with spring elements. A step-by-step limit state analysis was performed in order to reproduce the observed crack patterns and possible failure mechanisms. Alternative schemes of the original and the retrofitted .solution were analyzed

The fifth step was the repair and strengthening of the original structure using reversible (steel ties, rings, confinment with titanium bars) and irreversible (grouting, deep rejoining, thin jacketing from R/C) techniques.

CONCLUSIONS

The basic goal of structural restoration of historical monuments is to conserve them with best possible techniques and materials, as well as with the use of the best manpower available to carry out the work.

The Venice Charter acts as a conceptual guideline for any structural intervention.

The interdisciplinary approach used in all phases of the restoration projects should be considered.

It is worth to notice that it is better to keep the original structural system than to modify. From the experimental and analytical work was demonstrated that the minimum intervention is the maximum protection.

As a concluding remark considering all the above issues the subject of structural restoration consists in:

- **Suitable methodology for structural documentation for the monument under restoration.**

- **Suitable choice of techniques and materials compatible with the original structure.**

- **Suitable choice of dimensional analysis and durable restoration measures facilitating a safe and cost-effective restoration project.**